DRAFT MALAYSIAN STANDARD

11P011R4

STAGE : PUBLIC COMMENT (40.20)
DATE : 01/03/2013-30/04/2013

For Public Comment

Steel wire for reinforcement of concrete products - Specification (Fourth revision)

OFFICER/SUPPORT (LHL/ija)

ICS: 77.140.15

Descriptors: steel wire, reinforcement of concrete, requirement, dimension, quality, testing

© Copyright 2013

DEPARTMENT OF STANDARDS MALAYSIA

Contents

Page

Committee representation ii

Foreword iii

1 Scope 1

2 Normative references 1

3 Terms and definitions 2

4 Symbols 4

5 Designations 5

6 Steelmaking and manufacturing processes 6

7 Product characteristics 6

8 Evaluation of conformity 11

9 Test methods 15

10 Identification 16

11 Verification of properties in the case of dispute 16

Annex A Bond test for ribbed and indented steel wire - Beam test 17

Annex B Identification requirements 27

Bibliography 30

For Public Comment

© STANDARDS MALAYSIA 2013 - All rights reserved

Committee representation

The Industry Standards Committee on Metallic Materials and Semi-Finished Products (ISC P) under whose authority this Malaysian Standard was developed, comprises representatives from the following organisations:

Association of Marine Industries of Malaysia
Construction Industry Development Board Malaysia
Department of Standards Malaysia
Federation of Malaysian Manufacturers
IKRAM QA Services Sdn Bhd
Institute of Materials Malaysia
Jabatan Kerja Raya Malaysia
Malaysian Automotive Association
Malaysian Iron and Steel Industry Federation
Master Builders Association Malaysia
Ministry of International Trade and Industry
Pertubuhan Akitek Malaysia
SIRIM Berhad (National Centre for Machinery and Tooling Technology)
SIRIM Berhad (Secretariat)
SIRIM QAS International Sdn Bhd
The Institution of Engineers, Malaysia
Universiti Malaya
Universiti Sains Malaysia
Universiti Teknologi Malaysia

The Technical Committee on Steel Bars, Wire Rods and Wire Products which developed this Malaysian Standard consists of representatives from the following organisations

Association of Consulting Engineers Malaysia
Construction Industry Development Board Malaysia
IKRAM QA Services Sdn Bhd
Jabatan Kerja Raya Malaysia
Malaysian Iron and Steel Industry Federation
Master Builders Association Malaysia
Ministry of International Trade and Industry
MMC Gamuda KVMRT (PDP) Sdn Bhd
SIRIM Berhad (Secretariat)
SIRIM QAS International Sdn Bhd
The Institution of Engineers, Malaysia
Universiti Malaya
Universiti Teknologi MARA

Co-opted members

Amsteel Mills Sdn Bhd
Ann Joo Steel Bhd
Asia Wire Steel Mesh Manufacturers Sdn Bhd
CH Reinforcing Steel Sdn Bhd
Perwaja Steel Sdn Bhd
Southern PC Steel Sdn Bhd
Southern Steel Berhad
Southern Steel Mesh Sdn Bhd

For Public Comment

© STANDARDS MALAYSIA 2013 - All rights reserved

Foreword

This Malaysian Standard was developed by the Technical Committee on Steel Bars, Wire Rods and Wire Products under the authority of the Industry Standards Committee on Metallic Materials and Semi-finished Products.

Major modifications in this revision are as follows:

a) the title of this standard has been amended from “Cold reduced mild steel wire for the reinforcement of concrete - Specification” to “Steel wire for reinforcement of concrete products - Specification”;

b) this standard contains provisions for plain, indented and ribbed wire;

c) the requirements for plain, indented and ribbed wire in decoiled condition have been specified;

d) the characteristic strength has been increased to 500 MPa; and

e) ductility requirements have been aligned with grade B500A of MS 146:YYYY.

This standard has been developed so that it can be used in conjunction with MS EN 10080:YYYY. Definitions, symbols, steelmaking and manufacturing processes, routine inspection and testing, test methods, identification of the manufacturer and technical class and verification of mechanical properties in the case of dispute are all taken from MS EN 10080:YYYY.

This Malaysian Standard cancels and replaces MS 144:2006, *Cold reduced mild steel wire for the reinforcement of concrete – Specification (Third revision)*.

Compliance with a Malaysian Standard does not of itself confer immunity from legal obligations.

For Public Comment

© STANDARDS MALAYSIA 2013 - All rights reserved

Steel wire for reinforcement of concrete products - Specification (Fourth revision)

1 Scope

This Malaysian Standard specifies requirements for plain, indented and ribbed steel wire used for the reinforcement of concrete products.

This standard contains provisions for two grades, based on mechanical properties. Grade 500 is specified for plain, indented and ribbed wires. Grade 250 is specified as an option for plain wires only.

Bar or coil for the manufacture of structural welded fabric to MS 145 is not covered by this standard. MS 146:YYYY covers bar or coil for this purpose.

Wire for the prestressing of concrete and wire used for ties, lifting and other general engineering or industrial purposes is not covered by this standard.

The nominal wire diameter (size) range specified in this standard is 2.5 mm to 12 mm.

2 Normative references

The following normative references are indispensable for the application of this standard. For dated references, only the edition cited applies. For undated references, the latest edition of the normative reference (including any amendments) applies.

MS 145, *Steel fabric for the reinforcement of concrete*

MS 146:YYYY, *Steel for the reinforcement of concrete - Weldable reinforcing steel - Bar, coil and decoiled product - Specification*

MS ISO 6929, *Steel products - Definitions and classification*

MS ISO 15630-1:2012, *Steel for the reinforcement and prestressing of concrete - Test methods - Part 1: Reinforcing bars, wire rod and wire.*

MS EN 1992-1-1:2010, *Eurocode 2: Design of concrete structures: Part 1-1: General rules and rules for buildings*

MS EN 1992-1-1:2010 (NATIONAL ANNEX), *Malaysian National Annex to Eurocode 2: Design of concrete structures: Part 1-1: General rules and rules for buildings*

MS EN 10080:YYYY, *Steel for the reinforcement of concrete - Weldable reinforcing steel - General*

MS EN 12390-3, *Testing hardened concrete - Part 3: Compressive strength of test specimens*

EN 1766:2000, *Products and systems for the protection and repair of concrete structures - Test methods - Reference concretes for testing*

For Public Comment

© STANDARDS MALAYSIA 2013 - All right reserved

EN 10020:2000, *Definition and classification of grades of steel*

BS EN 10027-1, *Designation systems for steel - Steel names, principal symbols*

3 Terms and definitions

For the purposes of this standard, the terms and definitions given in EN 10020, BS EN 10027-1 and MS ISO 6929 and the following apply.

3.1 angle of transverse rib or indentation inclination (β)

Angle between the axis of the transverse rib or indentation and the longitudinal axis of the wire.

3.2 batch

Quantity of wires or decoiled products of one nominal diameter and one cast produced by one manufacturer and presented for examination at any one time.

3.3 characteristic value

Value of a material or product property having a prescribed probability of not being attained in a hypothetical unlimited test series.

NOTES:

1. This value generally corresponds to a specific fractile of the assumed statistical distribution of the particular property of the material or product.

2. A nominal value is used as the characteristic value in some circumstances.

3.4 coil

Single length of wire wound in concentric rings.

3.5 decoiled product

Reinforcing steel manufactured in coils and subsequently straightened for further processing.

3.6 indentation depth (t)

Distance between the surface of the wire and the deepest point of the indentation.

3.7 indentation width (b)

Width of the indentation to be measured parallel to the axis of the wire.

3.8 indented reinforcing steel

Reinforcing steel with defined indentations uniformly distributed over the entire length.

For Public Comment

© STANDARDS MALAYSIA 2013 - All rights reserved

3.9 longitudinal rib

Uniform continuous protrusion parallel to the axis of the wire.

3.10 maximum value

Value which no test result shall exceed.

3.11 minimum value

Value below which no test result shall fall.

3.12 nominal cross-sectional area (A_n)

Cross-sectional area equivalent to the area of a circular plain wire of the same nominal diameter, d (i.e. $\frac{\pi d^2}{4}$)

3.13 plain reinforcing steel

Reinforcing steel with a smooth surface.

3.14 reinforcing steel

Steel product with a circular or practically circular cross-section which is suitable for the reinforcement of concrete.

3.15 relative rib area (f_R)

Area of the projection of all ribs on a plane perpendicular to the longitudinal axis of the wire, divided by the rib spacing and the nominal circumference.

3.16 rib height (h)

Distance from the highest point of the rib (transverse or longitudinal) to the surface of the core, to be measured normal to the axis of the wire.

3.17 rib spacing/indentation spacing (c)

Distance between the centres of two consecutive transverse ribs or two consecutive indentations measured parallel to the axis of the wire.

3.18 ribbed reinforcing steel

Reinforcing steel with at least two rows of transverse ribs, which are uniformly distributed over the entire length.

3.19 semi-finished product

Product which requires further processing in order to achieve the standard and special properties specified.

For Public Comment

© STANDARDS MALAYSIA 2013 - All right reserved

3.20 standard property

Property which is part of the routine inspection and test requirements for every test unit.

3.21 technical class

Type of steel defined by its performance characteristics, identified by a unique product number.

3.22 transverse rib

Rib on the surface of the wire other than a longitudinal rib.

3.23 transverse rib flank inclination

Angle of the rib flank measured perpendicular to the longitudinal axis of the rib.

NOTE. Figure 1.

3.24 welded fabric

Arrangement of longitudinal and transverse bars, rods or wires of the same or different nominal diameter and length that are arranged substantially at right angles to each other and factory electrical resistance welded together by automatic machines at all points of intersection.

For Public Comment

4 Symbols

A list of symbols used in this standard, reproduced from MS EN 10080:YYYY, is given in Table 1.

Table 1. List of symbols

Symbol	Description	Unit
A_n	Nominal cross-sectional area	mm^2
A_{gt}	Percentage total elongation at maximum force	%
b	Width of indentation	mm
c	Transverse rib or indentation spacing	mm
C_{eq}	Carbon Equivalent Value (CEV)	% by mass
C_v	Specified characteristic value	[a]
d	Nominal diameter of the reinforcing steel	mm
e	Gap between rib or indentation rows	mm
f_R	Relative rib area	-
f_P	Relative indentation area	-
h	Rib height	mm
k	Coefficient as a function of the number of test results	-
$\bar{x}$	Average value of test results	[a]

© STANDARDS MALAYSIA 2013 - All rights reserved

Table 1. List of symbols *(continued)*

Symbol	Description	Unit
R_e	Yield strength	MPa[b]
R_{eH}	Upper yield strength	MPa[b]
R_m	Tensile strength	MPa[b]
R_m/R_e	Ratio tensile strength/yield strength	-
$R_{p0.2}$	0.2 % proof strength, non proportional extension	MPa[b]
s	Estimate of the standard deviation	[a]
α	Transverse rib flank inclination	degrees
β	Angle of transverse rib or indentation inclination	degrees
α_1, α_2, α_3, α_4	Increment (specified in the product specification)	[a]
t	Depth of indentation	mm
b	Width of the beam (beam test)	mm
d_m	Mandrel diameter (beam test)	mm
F_a	Total force applied (beam test)	kN
F_i	Force in hinge and bar or wire (beam test)	kN
σ_s	Stress in the bar or wire (beam test)	MPa[b]
τ_b	Bond stress (beam test)	MPa[b]
τ_{bu}	Bond stress at maximum force (beam test)	MPa[b]
$\tau_{0.01}$, $\tau_{0.1}$, τ_1	Bond stress at 0.01 mm, 0.1 mm and 1 mm slip (beam test)	MPa[b]

[a] The unit depends on the property.

[b] 1 MPa = 1 N/mm^2.

For Public Comment

5 Designations

The products covered by this standard shall be designated with the following information:

a) description of the product form (i.e. plain coil, indented coil, ribbed coil, decoiled plain, decoiled indented, decoiled ribbed);

b) the nominal dimensions of the product;

c) the number of this standard (i.e. MS 144:YYYY); and

d) grade (i.e. 500 or 250).

For example, the designation for 8 mm indented wire would be: “Indented coil 8 mm MS 144”.

Where plain coil is specified, the grade shall also be specified. For example, the designation for 8 mm plain wire of grade 250 would be: “Plain coil 8 mm MS 144 Grade 250”.

© STANDARDS MALAYSIA 2013 - All right reserved

Where products that conform to this standard are also required to meet all of the requirements of MS EN 10080:YYYY, for example for the purposes of MS marking, then reference to this standard should also be made in the designation. For example, the designation of the 8 mm indented wire described above would be: “Indented coil MS EN 10080 8 mm MS 144”.

6 Steelmaking and manufacturing processes

The melting process and type of deoxidation of the steel shall be at the discretion of the steel producer.

The manufacturing process for the production of coils shall be at the discretion of the manufacturer. It shall be reported to the purchaser if requested.

Decoiling of coil material shall be done by a machine made for this purpose.

7 Product characteristics

7.1 Chemical composition

The maximum values of individual elements and the carbon equivalent shall not exceed the values given in Table 2.

The carbon equivalent value C_{eq} shall be calculated using the following formula:

$$C_{eq} = C + \frac{Mn}{6} + \frac{Cr + Mo + V}{5} + \frac{Ni + Cu}{15}$$

where

Mn is manganese content, expressed in percentage;

Cr is chromium content, expressed in percentage;

V is vanadium content, expressed in percentage;

Mo is molybdenum content, expressed in percentage;

Cu is copper content, expressed in percentage; and

Ni is nickel content, expressed in percentage.

For Public Comment

© STANDARDS MALAYSIA 2013 - All rights reserved

Table 2. Chemical composition (maximum % by mass)

Mass fraction in percentage

	Carbon max.	Sulphur max.	Phosphorus max.	Nitrogen[a] max.	Copper max.	Carbon Equivalent max.
Cast analysis	0.22	0.05	0.05	0.012	0.80	0.42
Product analysis	0.24	0.055	0.055	0.014	0.85	0.44
[a] Higher nitrogen contents are permissible if sufficient quantities of nitrogen binding elements are present.						

7.2 Mechanical properties

7.2.1 General

The characteristic value is (unless otherwise indicated) the lower or upper limit of the statistical tolerance interval at which there is a 90 % probability (1 - α = 0.90) that 95 % (p = 0.95) or 90 % (p = 0.90) of the values are at or above the lower limit or at or below the upper limit respectively. This quality level refers to the long-term quality level of production.

7.2.2 Conditions of testing

Wire test pieces shall be in the straightened and aged condition.

Decoiled wire test pieces shall be in the aged condition.

Ageing method: heat the test piece to 100 °C, maintain at this temperature (± 10 °C) for a period of 60^{+15}_{0} min, and then cool in still air to room temperature. The method of heating shall be left to the discretion of the manufacturer.

7.2.3 Tensile properties

The specified characteristic values for the tensile properties are given in Table 3.

Table 3. Characteristic tensile properties

Nominal diameter, d (mm)	Grade	Yield strength, R_e (MPa)	Tensile/yield strength ratio, R_m/R_e	Total elongation at maximum force, A_{gt} (%)
≤ 12	250	250	1.15	5.0
< 8	500	500	1.02	1.0
≥ 8	500	500	1.05	2.5

Determine the yield strength (R_e) from the 0.2 % proof strength ($R_{p0.2}$).

7.2.4 Bend performance

Bend performance shall be demonstrated by means of the following rebend test method.

For Public Comment

© STANDARDS MALAYSIA 2013 - All right reserved

Bend the test pieces through an angle of 90°, around a mandrel with a diameter not exceeding 4d for grade 500 and not exceeding 2d for grade 250, where d is the nominal diameter of the wire, age the test piece and then bend back by at least 20°.

After the test, the specimen shall show no sign of fracture or cracks visible to a person of normal or corrected vision.

7.3 Dimensions, mass per metre and tolerances

7.3.1 Preferred diameters, nominal cross-sectional area and mass per metre

The range of nominal diameters of wires shall be 2.5 mm to 12 mm.

NOTE. The preferred millimetre nominal diameters are 2.5, 5, 6, 7, 8, 9, 10 and 12.

The values for the nominal cross sectional area and mass per metre of preferred diameters shall be as given in Table 4.

NOTE. The values for the nominal mass per metre are calculated from the values of the nominal cross sectional area on the basis that steels have a mass of 0.007 85 kg/mm^2 per metre run.

Table 4. Nominal cross-sectional area and mass per metre of preferred diameters

Nominal size (mm)	Cross sectional area (mm^2)	Mass per metre (kg)
2.5	4.9	0.039
5	19.6	0.154
6	28.3	0.222
7	38.5	0.302
8	50.3	0.395
9	63.6	0.499
10	78.5	0.617
12	113	0.888

7.3.2 Tolerances

The permissible deviation from nominal mass per metre shall be not more than ± 4.5 % on nominal diameters greater than 8 mm, and ± 6.0 % on nominal diameters less than or equal to 8 mm.

7.3.3 Length

The nominal length of decoiled products shall be agreed at the time of enquiry and order.

The permissible deviation from the nominal length shall be ± 25 mm. Other tolerances may be agreed at the time of enquiry and order.

7.3.4 Coil mass

The nominal coil mass shall be agreed at the time of enquiry and order.

For Public Comment

 © STANDARDS MALAYSIA 2013 - All rights reserved

7.4 Bond strength and surface geometry

7.4.1 General

Ribbed and indented wires are characterised by their surface geometry, by means of which bond with the concrete is achieved.

Bond property requirements of ribbed and indented reinforcing wires shall be based on surface geometry, or by means of the bond test provided in Annex A. Bond property requirements based on surface geometry are preferred. The assessment criteria for the bond tests shall be as given in the appropriate design documents. A suitable means of factory production control based on the control of surface geometry shall be derived from the bond test results.

7.4.2 Surface geometry of ribbed wires

7.4.2.1 General

Ribbed wires are characterised by the dimensions, number and configuration of transverse and longitudinal ribs. Wires shall have two or more rows of transverse ribs uniformly distributed around the perimeter. Within each row the ribs shall be uniformly spaced. Longitudinal ribs can be present or not.

An example of ribbed steel is given in Figure 1.

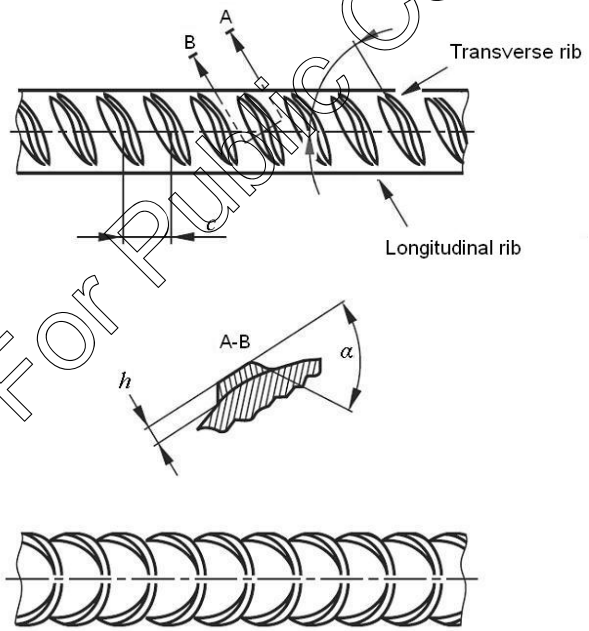

Figure 1. Rib geometry example with two rows of transverse ribs

The values for the spacing, height and rib inclination of transverse ribs shall be within the ranges given in Table 5.

For Public Comment

© STANDARDS MALAYSIA 2013 - All right reserved

Table 5. Ranges for rib parameters

Rib height, h	Rib spacing, c	Rib inclination, β
0.03d to 0.15d	0.4d to 1.2d	35° to 75°

The characteristic relative rib area shall meet the requirements of Table 6. The characteristic values in Table 6 are for p = 0.95.

NOTE. The methods for the calculation of relative rib area are given in MS ISO 15630-1:2012.

Table 6. Characteristic relative rib area

Nominal bar diameter, d (mm)	Relative rib area
$d \leq 6$	0.035
$6 < d \leq 12$	0.040

7.4.2.2 Transverse ribs

Transverse ribs shall approximate to a crescent shape, and merge smoothly into the core of the product.

The projection of the transverse ribs shall extend over at least 75 % of the circumference of the product, which shall be calculated from the nominal diameter.

The transverse rib flank inclination α shall be greater than 45°, and the transition from the rib to the core shall be radiused.

7.4.2.3 Longitudinal ribs

Where longitudinal ribs are present, their height shall not exceed 0.10d, where d is the nominal diameter of the product.

7.4.3 Surface geometry of indented steel

7.4.3.1 General

Indented wires are characterised by the dimensions, number and configuration of indentations. Indented wires shall have at least two equally distributed longitudinal rows of indentations. The indentations shall form an angle of inclination with the wire axis.

An example of an indented wire is shown in Figure 2.

For Public Comment

© STANDARDS MALAYSIA 2013 - All rights reserved

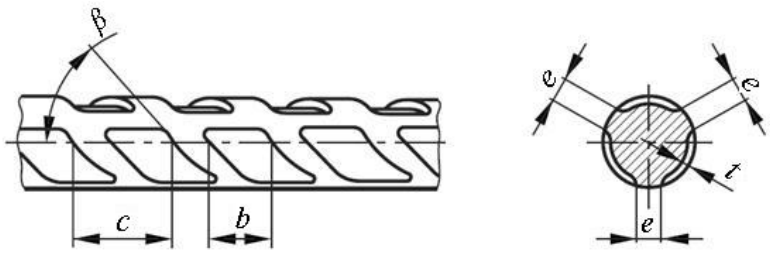

Figure 2. Indentation geometry (example with three rows of indentations)

Indented wire shall satisfy the requirements given in 7.4.3.2.

7.4.3.2 Indentation geometry

The indentation parameters shall be within the ranges given in Tables 7 and 8, where d is the nominal diameter of the wire.

Table 7. Ranges for the indentation parameters

Depth of indentations, t	Width, b	Spacing, c	Maximum sum of gap, $\sum e$
0.02d to 0.1d	0.2d to 1.0d	0.4d to 1.5d	0.75d

Table 8. Depth of indentations

Nominal wire diameter, d (mm)	Minimum average depth of indentations, t as a percentage of d
$d \leq 6$	4
$6 < d \leq 8$	4.5
$d > 8$	5

The indentations shall form an angle of inclination with the longitudinal axis, β of between 35° and 75°.

For Public Comment

8 Evaluation of conformity

8.1 Routine inspection and testing

8.1.1 General

Reinforcing steels shall be produced under a permanent system of routine inspection and testing, which shall include evaluation of specified properties, as described in 8.1.2 and 8.1.3.

© STANDARDS MALAYSIA 2013 - All right reserved

8.1.2 Sampling and testing of finished products

8.1.2.1 Coils

The test unit shall be the cast or part quantity of the cast.

The rate of testing shall be as follows:

a) for chemical composition, one analysis per test unit. The chemical composition (cast analysis) of the steel shall be determined by the steel producer;

b) for rebend tests, mass per metre and surface geometry, one test piece per test unit and nominal diameter; and

c) for tensile tests, one test piece per 30 t with at least one test piece per test unit and per nominal diameter.

Test results shall be evaluated in accordance with 8.1.3.

8.1.2.2 Decoiled products

The processor of products in coil shall ensure that the decoiled products continue to meet the specified property requirements of this standard. Inspection and testing of decoiled wires shall include as a minimum:

a) visual inspection for surface geometry damage of every coil processed;

b) surface geometry measurement on at least one sample per day and produced size; and

c) tensile testing at a frequency of at least one sample per machine type (roller or spinner) per week from each of two processed sizes. The sampling shall be such that all machines and sizes are covered in a six month period. Only one sample shall be taken from each coil.

Testing may be carried out either by the processor using its own resources (internal or external) or by the processor in co-operation with the coil manufacturer. The tests shall not be seen as release tests, but as the basis for the assessment of the long-term quality level (LTQL) as described in 8.2.

For Public Comment

8.1.3 Evaluation of test results

8.1.3.1 Tensile properties

Where the characteristic value C_v is specified as a lower limit, the results shall be deemed to conform to this standard if either:

a) all individual values are greater than or equal to the specified characteristic value C_v; or

b) $\bar{x} \geq C_v + \alpha_1$

where

α_1 is 10 MPa for R_e, zero for R_m/R_e, 0 % for A_{gt}; and

© STANDARDS MALAYSIA 2013 - All rights reserved

all individual values are greater than or equal to the minimum values given in Table 9.

Table 9. Absolute minimum values of tensile properties

Nominal diameter, d (mm)	Grade	Yield strength, R_e (MPa)	Tensile/yield strength ratio, R_m/R_e	Total elongation at maximum force, A_{gt} (%)
≤ 12	250	243	1.13	4.0
< 8	500	485	1.01	0.8
≥ 8	500	485	1.03	2.0

8.1.3.2 Bend performance, geometry, mass per metre

In the rebend test, all test pieces shall fulfil the requirements of 7.2.4.

If testing the surface geometry, the results shall meet the requirements of 7.4.

If testing the mass per metre, no individual value shall be outside the tolerances specified in 7.3.2.

8.1.3.3 Retests

If any test specimen fails to meet the yield strength, stress ratio, total elongation at maximum force, rebend or rib or indentation geometry requirements, two additional test specimens shall be taken from different wires of the same batch to undergo tests. If both additional test specimens pass the retests, the batch shall be deemed to conform to this standard. If either of the additional test specimens fails the retests, the batch shall be deemed not to conform to this standard.

8.1.4 Traceability and test reports

Delivered batches shall be identifiable and traceable to the manufacturer and to their production data. The manufacturer shall establish and maintain the records required and shall identify the products and their delivery documentation accordingly.

For each delivery, manufacturers shall supply the following information:

a) the cast number and cast analysis, including all specified elements and elements used for the calculation of the carbon equivalent value;

b) the carbon equivalent value;

c) the results of the tensile and rebend tests;

d) mass per metre;

e) the manufacturing process route; and

f) for ribbed or indented wires, the rolled on manufacturer's mark.

For Public Comment

© STANDARDS MALAYSIA 2013 - All right reserved

8.2 Assessment of the long-term quality level

8.2.1 General

The results of tests on all test units of continuous production shall be collated and statistically evaluated for R_e, A_{gt}, and R_m/R_e taking either the number of results corresponding to the preceding six months' operation or the last 200 results, whichever is the greater.

8.2.2 Determination of the long-term quality level

The evaluation shall be carried out per nominal diameter.

The following requirement shall be satisfied for R_e, A_{gt} and R_m/R_e:

$$\bar{x} - ks \geq C_v$$

where

$\bar{x}$ is the average value;

s is the estimate of the standard deviation of the population;

k is the coefficient listed in Table 10 for R_e and in Table 11 for A_{gt} and R_m/R_e; and

C_v is the specified characteristic value.

The foregoing is based on the assumption that the distribution of a large number of results is normal but this is not a requirement of this standard. However, the following alternative methods may be used to establish conformity of the production with the requirements of this standard:

a) graphical methods including control charts; and

b) non-parametric statistical techniques.

Table 10. Coefficient (k) as a function of the number (n) of test results (for a reliable failure rate of 5 % [p = 0.95] at a probability of 90 %)

n	k	n	k
5	3.40	30	2.08
6	3.09	40	2.01
7	2.89	50	1.97
8	2.75	60	1.93
9	2.65	70	1.90
10	2.57	80	1.89
11	2.50	90	1.87
12	2.45	100	1.86
13	2.40	150	1.82
14	2.36	200	1.79

For Public Comment

 © STANDARDS MALAYSIA 2013 - All rights reserved

Table 10. Coefficient (k) as a function of the number (n) of test results (for a reliable failure rate of 5 % [p = 0.95] at a probability of 90 %) *(continued)*

n	k	n	k
15	2.33	250	1.78
16	2.30	300	1.77
17	2.27	400	1.75
18	2.25	500	1.74
19	2.23	1 000	1.71
20	2.21	∞	1.64

Table 11. Coefficient (k) as a function of the number (n) of test results (for a reliable failure rate of 10 % [p = 0.90] at a probability of 90 %)

n	k	n	k
5	2.74	30	1.66
6	2.49	40	1.60
7	2.33	50	1.56
8	2.22	60	1.53
9	2.13	70	1.51
10	2.07	80	1.49
11	2.01	90	1.48
12	1.97	100	1.47
13	1.93	150	1.43
14	1.90	200	1.41
15	1.87	250	1.40
16	1.84	300	1.39
17	1.82	400	1.37
18	1.80	500	1.36
19	1.78	1 000	1.34
20	1.77	∞	1.28

For Public Comment

9 Test methods

The tensile test for the determination of R_e, R_m/R_e and A_{gt}, the rebend test, the measurement of the surface geometry and the determination of the relative rib or indentation area f_R or f_P the determination of deviation from nominal mass per metre and the methods for chemical analysis shall be in accordance with MS ISO 15630-1:2012, supplemented with the instructions in this standard. In particular, pre-test conditioning shall be in accordance with 7.2.2.

© STANDARDS MALAYSIA 2013 - All right reserved

10 Identification

Each reinforcing steel shall have identification marks to identify the manufacturer according to the requirements of Annex B.

Where MS marking is required, product marking shall be in accordance with MS EN 10080:YYYY.

11 Verification of properties in the case of dispute

11.1 Mechanical properties

11.1.1 Whenever the determination of a property specified in this standard as a characteristic value creates a dispute, the value shall be verified by selecting and testing three test pieces from various pieces from the batch under examination.

If one test result is less than the specified characteristic value, both the test piece and the test method shall be carefully examined. If there is a local fault in the test piece or reason to believe that an error has occurred in the test, the test result shall be ignored. In this case a further single test shall be carried out.

If the three valid test results are greater than or equal to the specified characteristic value, the batch shall be deemed to conform to this standard. If not, the requirements of 11.1.2 shall apply.

11.1.2 If 11.1.1 is not fulfilled, 10 additional test pieces shall be selected from different products in the batch.

The batch shall be deemed to conform to this standard if the average test result of the 10 test pieces is higher than the characteristic value and the individual values are higher than the minimum value given in Table 9, using the coefficient given in Table 10 or Table 11, as appropriate.

If not, the batch is rejected.

11.2 Product analysis

If during product analysis, a single sample falls outside the maximum deviation limits for the composition range of a specified element, given in Table 2, further samples shall be selected from the remainder of the batch as follows:

a) at least two samples from the same cast for delivered masses up to 5 t;

b) at least five samples from the same cast for delivered masses up to 20 t; and

c) at least eight samples for delivered masses over 20 t.

If any of the further samples analysed fall outside the maximum product analysis levels given in Table 2 for any element, the batch shall be deemed not to conform to this standard.

For Public Comment

 © STANDARDS MALAYSIA 2013 - All rights reserved

Annex A
(normative)

Bond test for ribbed and indented steel wire - Beam test

A.1 Introduction

This annex describes a method for testing the bond characteristics for ribbed and indented wires to be used as reinforcing steel in concrete structures.

The beam test is intended to determine the bond of reinforcing steel and is to serve as a basis for the comparison of reinforcing wires of approximately the same wire diameter but with different surface configurations.

The test method is applicable for reinforcing steel wire in diameters ≤ 32 mm.

NOTE. The method is based on the RILEM-Recommendation RC5, Bond test for reinforcement steel.

A.2 Principle of the test

A test beam is loaded by simple flexure until complete bond failure of the reinforcing steel occurs in both half-beams or until the reinforcing steel itself fails. During loading, the slip of the two ends of the reinforcing steel is measured.

The beam used for the test consists of two parallelepipedal reinforced concrete blocks interconnected at the bottom by the reinforcing wire of which the bond is to be tested, and at the top by a steel hinge. The dimensions of the two blocks and the hinges are determined by the diameter of the reinforcing wire to be tested. The test is illustrated in Figures A.1, A.2, A.3, and A.4.

The dimensions of the test beams depend on the nominal diameter of the reinforcing wire for which the bond is to be determined. For nominal diameters less than 16 mm, a beam specimen of type A is used and for nominal diameters equal to or larger than 16 mm, a beam specimen of type B is used (see Figures A.3 and A.4).

NOTE. Experience of testing bars with diameters larger than 32 mm is limited. To use the test method of this annex for such large diameters, a type testing program should be performed to evaluate the applicability of the test method.

For Public Comment

© STANDARDS MALAYSIA 2013 - All right reserved

Dimensions in millimetres

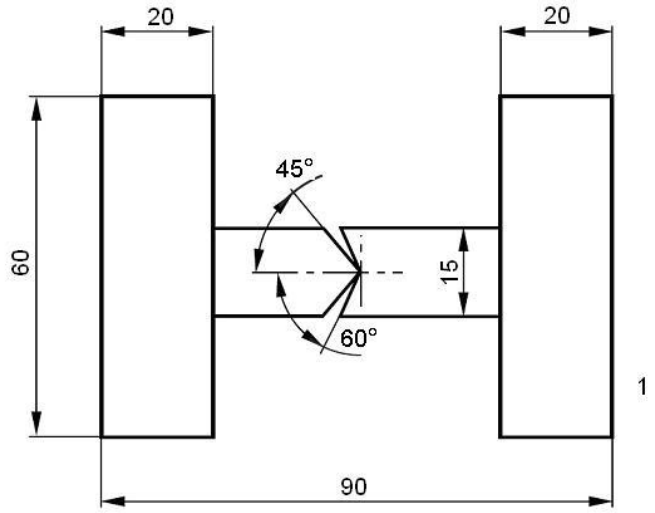

Key

1 width = 100 mm

Figure A.1. Dimensions of the hinge for beam type A (*d* < 16 mm)

Dimensions in millimetres

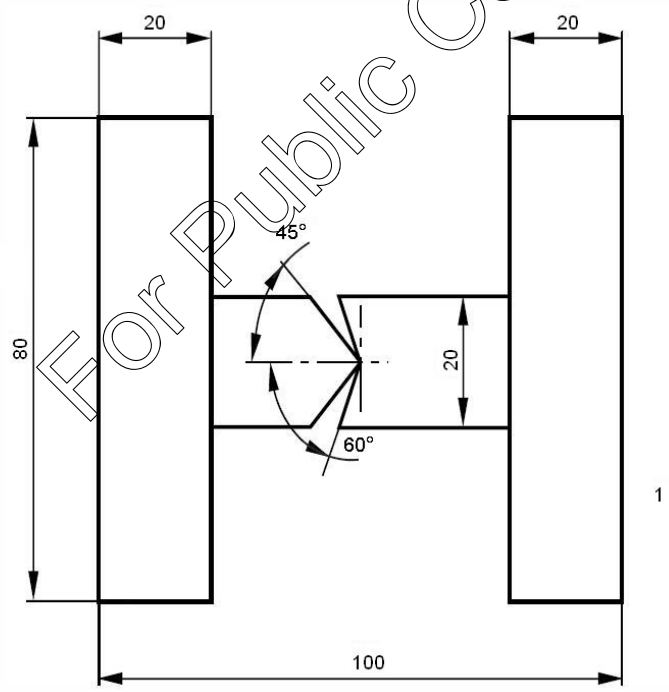

Key

1 width = 150 mm

Figure A.2. Dimensions of the hinge for beam type B (*d* ≥ 16 mm)

For Public Comment

© STANDARDS MALAYSIA 2013 - All rights reserved

Dimensions in millimetres

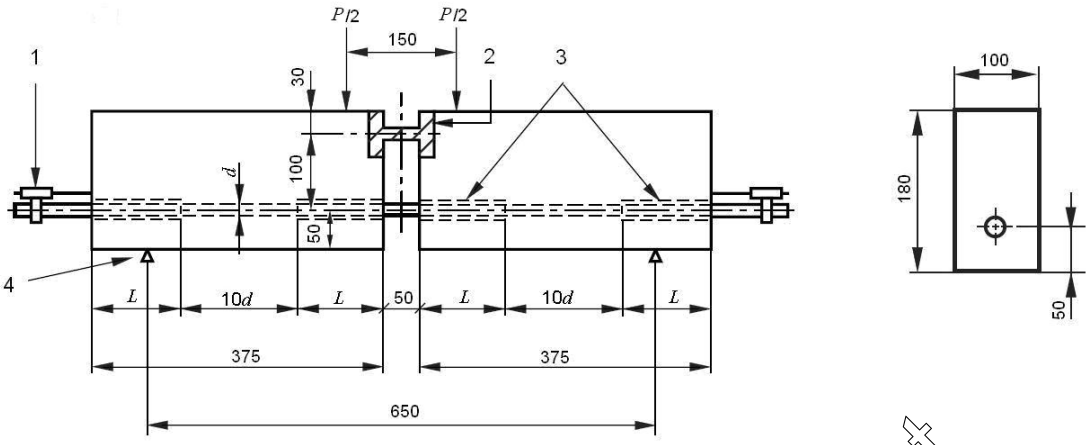

Key

1 slip measuring device
2 steel hinge
3 plastic sleeves
4 movable support

Figure A.3. Beam test type A (d < 16 mm)

Dimensions in millimetres

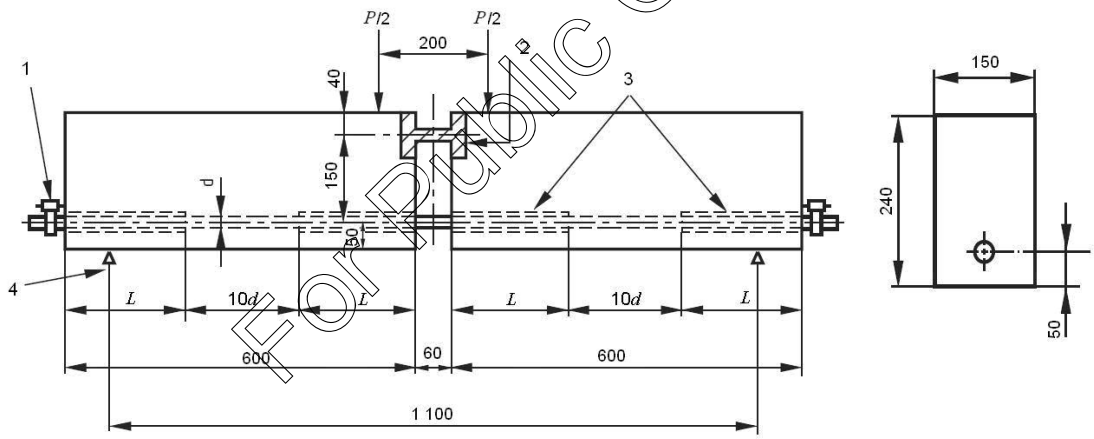

Key

1 slip measuring device
2 steel hinge
3 plastic sleeves
4 movable support

Figure A.4. Beam test type B (d ≥ 16 mm)

For Public Comment

© STANDARDS MALAYSIA 2013 - All right reserved

A.3 Samples and specimens

If various sizes of the same technical class of reinforcing steel and the same surface configuration are to be tested they may be grouped into series. All diameters within a group shall have the same configuration with regard to ribs. A suitable grouping is shown in Table A.1.

NOTE. To have the same surface configuration implies that the relationship between rib height/wire diameter and rib spacing/wire diameter as well as the rib inclination is the same.

Table A.1. Series of reinforcing wire diameters for testing of bond

Denomination of the series	Range of nominal Diameters, d (mm)	Representative nominal diameter of the series (mm)
Small diameters	$d < 10$	8
Medium diameters	$10 < d \leq 20$	16
Large diameters	$20 < d \leq 32$	32
Very large diameters	$32 < d \leq 50$	Each size to be tested

25 beam tests shall be carried out for each series and type of surface geometry with the representative diameter of the series. Samples shall be selected to minimise the variation in surface configuration within a series. If all samples are not taken from the same wire, then they should be taken from as few wires as possible.

If the representative diameter of a series is not manufactured, the largest diameter produced in the series shall be tested.

If reinforcing wires with the same surface geometry but with different specified yield strength are to be characterised, the tests shall be carried out with the product having the highest specified yield strength.

The surface geometry of the reinforcing steel to be used in the tests shall be described in accordance with MS EN 10080:YYYY and measured in accordance with MS ISO 15630-1:2012. All the parameters required to calculate the relative rib area shall be measured and recorded.

For Public Comment

A.4 Test equipment

A.4.1 Moulds for the test beams, made of steel, cast iron or any other non-absorbent material which does not react with the components of the concrete. Watertightness and dimensions shall be maintained after use.

A.4.2 Steel hinges, formed from two pieces of steel in a T-shape, as shown in Figure A.1 and Figure A.2, which interconnect the transversal interior faces of the two blocks. The width of the hinge is the same as the width, b, of the beam.

A.4.3 System for regulating forces, fitted to the mechanism for applying forces, which enables them to be increased continuously, within the limits described in A.6.

© STANDARDS MALAYSIA 2013 - All rights reserved

A.4.4 Force application system, for applying forces perpendicular to the face of the beam specimen.

The mechanism for applying forces shall consist of steel rotating knife-edges or roller bearings; two to support the beam specimen and another two for loading.

A.4.5 Instruments for measuring forces, with an accuracy of at least 1 % of the test result.

The reading device shall give an indication of the maximum force reached during the test.

A.4.6 Instruments for measuring slip, accurate to ± 0.01 mm.

A.5 Preparation of samples

A.5.1 Reinforcing steel to be tested

The test wire shall be in the "as manufactured" condition without loose millscale, preferably entirely free from rust and, if necessary, carefully degreased with carbon tetrachloride (CCl_4) or ethylene trichloride (C_2HCl_3). The test wire shall be without any machining. If the test bar is corroded, the conditions of the bar shall be described in the test report and possibly supported by photographs of the surface.

The wire shall not be cleaned in any way that might change its roughness.

Test pieces taken from coil shall be straightened according to Clause 4 of MS ISO 15630-1:2012, prior to testing.

A.5.2 Auxiliary reinforcement

Auxiliary reinforcement shall have the same strength and surface characteristics as the reinforcing wire to be tested. Figures A.5 and A.6 detail the components for the auxiliary reinforcement.

For Public Comment

© STANDARDS MALAYSIA 2013 - All right reserved

Dimensions in millimetres

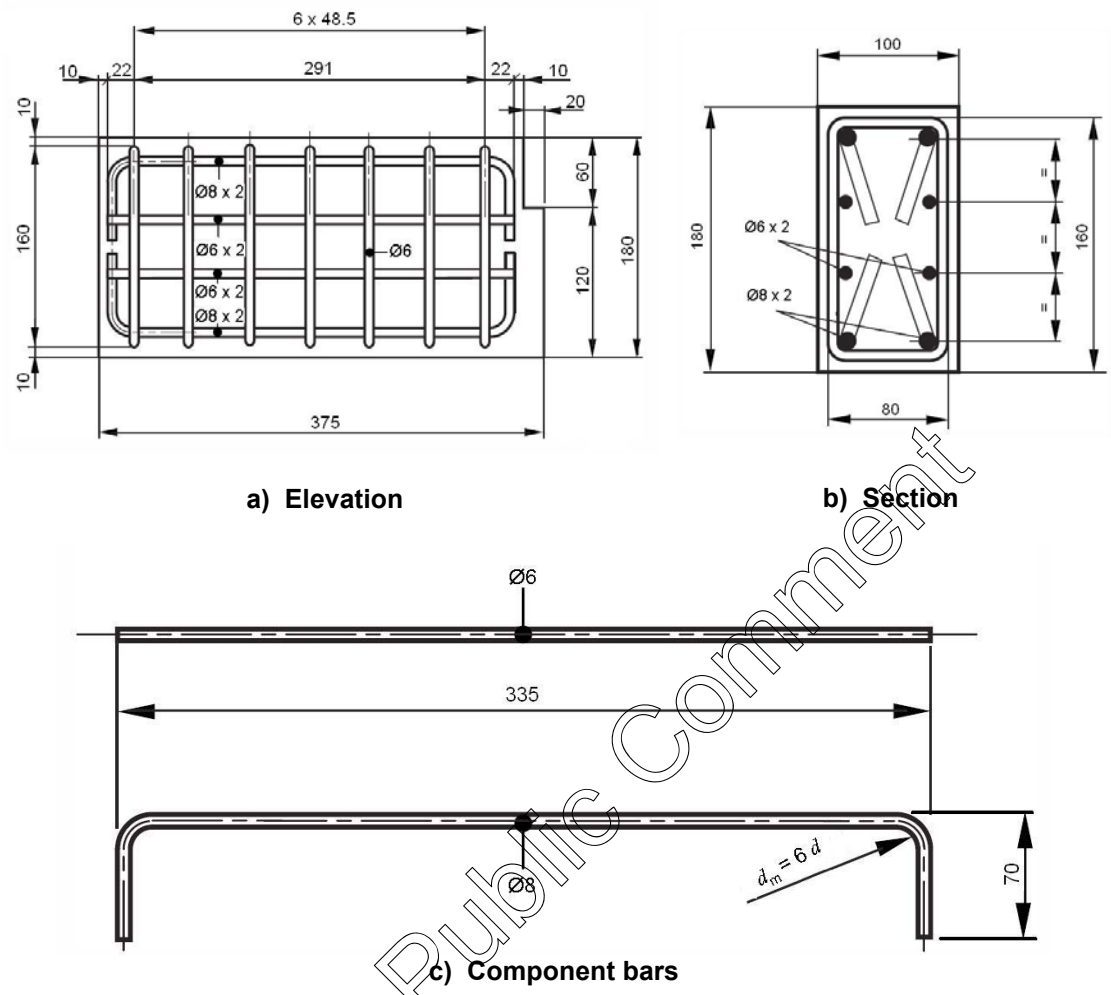

Bent bars are placed with the bends at 15° to 17° to the vertical.

Figure A.5. Bond test type A (d < 16 mm) - Reinforcement of beam specimens

For Public Comment

© STANDARDS MALAYSIA 2013 - All rights reserved

Dimensions in millimetres

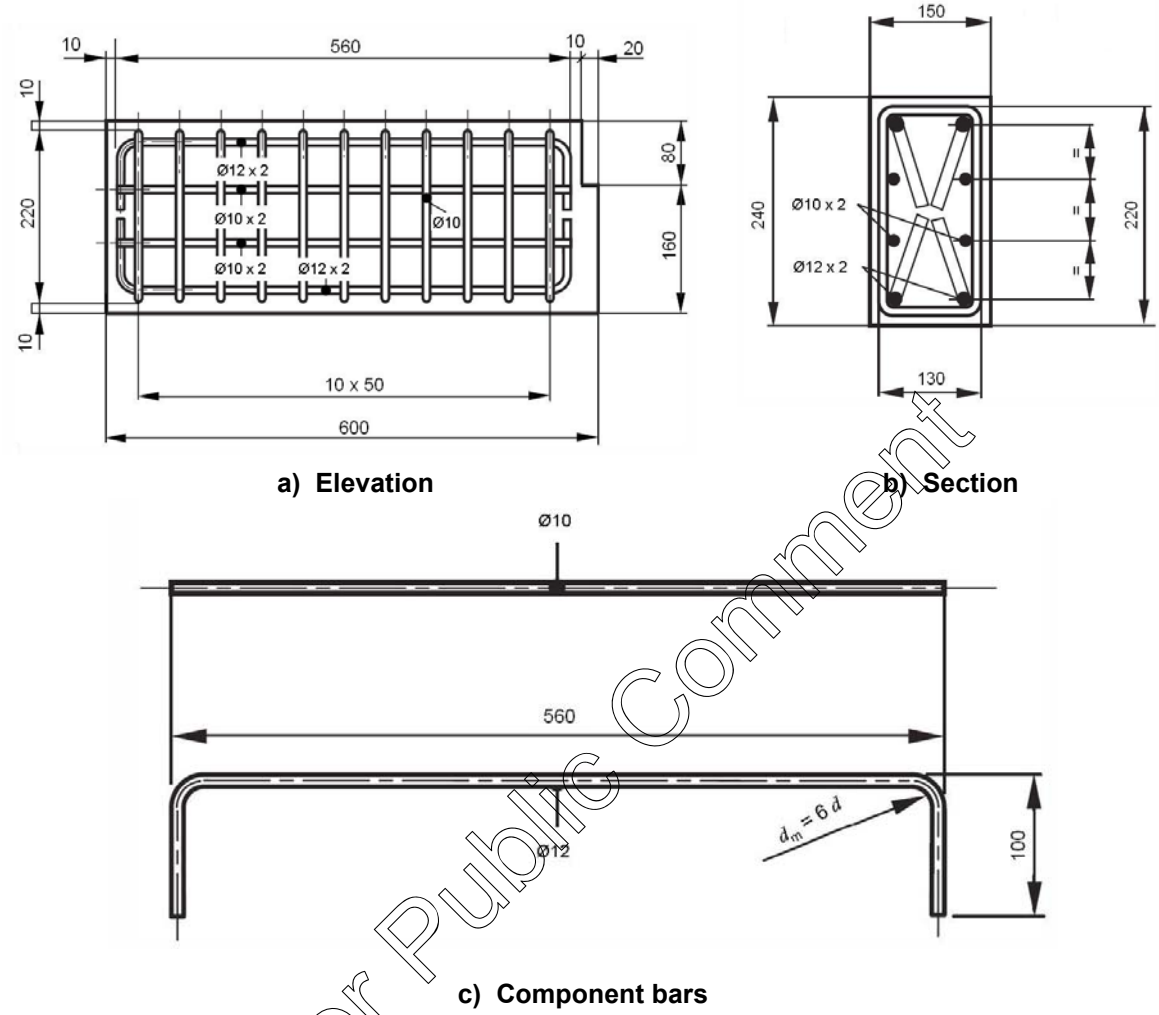

a) Elevation

b) Section

c) Component bars

For Public Comment

Bent bars are placed with the bends 15° to 17° to the vertical.

Figure A.6. Bond test type B (d ≥ 16 mm) - Reinforcement of beam specimens

A.5.3 Plastic sleeves

Sleeves used to avoid the adherence of the concrete to the reinforcing wire to be tested shall be of plastic.

These sleeves shall be rigid so as not to become deformed during the test.

A.5.4 Concrete

A.5.4.1 General

The concrete for the beam specimen as well as the cylindrical test pieces shall be produced, placed and stored according to EN 1766:2000 with the qualifications given in A.5.4.2.

© STANDARDS MALAYSIA 2013 - All right reserved

A.5.4.2 Strength class of concrete

The concrete shall be either of Type C (0.70) of EN 1766:2000 with a compression strength target value of (25 ± 5) MPa, or of Type C (0.45) of EN 1766:2000 with a compressive strength target value of (50 ± 5) MPa, measured on 150 mm × 300 mm cylindrical specimens and tested according to MS EN 12390-3.

If not otherwise agreed, the tests shall be performed with concrete Type C (0.70) of EN 1766:2000.

NOTE. It is recommended that the test pieces for 25 tests are prepared in 5 lots or mixes, making 5 specimens from each lot.

The age of the concrete shall not be less than 21 days and not more than 35 days.

A.6 Execution of the tests

Resting the test beam on two rotating knife-edges or rolling bearings, load with two forces of equal magnitude, disposed symmetrically with regard to mid-span and likewise applied through movable knife-edges or rollers.

The total force, F_a applied to the test piece is given by one of the following expressions:

$$F_a = \frac{A_n \sigma_s}{1.25}, \text{ for } d < 16 \text{ mm}$$

where

A_n is the nominal cross-sectional area of the reinforcing wire.

Apply loading in one of three ways:

a) in consecutive increments corresponding to stresses, σ_s in the wire of 0 MPa, 80 MPa, 160 MPa, 240 MPa, etc.

b) in smaller increments; or

c) continuously, by logging with electronic devices.

For a) or b), increase the force, at each stage, gradually and continuously. Reach each increment in half a minute and maintain the load long enough to stabilise the slip, or, at the most, for 2 mins. For c), use a loading speed not exceeding a corresponding stressing rate of 1 MPa/s in the wire.

Measure the slip at the beginning and at the end of each increment in loading.

Continue the test until complete bond failure of the wire occurs in both half-beams or until the wire itself fails. Bond failure generally does not take place simultaneously in the two half-beams. For this reason, when the half-wire whose bond has failed attains a slip of 3 mm, hold this half-wire in a gripping device which will bear against the concrete and prevent any further slip.

For Public Comment

 © STANDARDS MALAYSIA 2013 - All rights reserved

Force-slip curves may be either recorded automatically or plotted point by point from dial gauge readings.

A.7 Test results

A.7.1 Calculation of the bond stress

If the total force applied to the beam test is F_a, for a given slip, the bond stress, τ_b, is given by:

$$\tau_b = \frac{\sigma_s}{40}$$

where

σ_s is the stress of the wire, given by one of the following formulae:

$\sigma_s = \dfrac{1.25 F_a}{A_n}$, for d < 16 mm; and

$\sigma_s = \dfrac{1.50 F_a}{A_n}$, for d ≥ 16 mm.

A.7.2 Values of bond stress

Calculate the bond stress for four measured slip values:

a) $\tau_{0.01}$ = Bond stress at 0.01 mm slip;

b) $\tau_{0.1}$ = Bond stress at 0.1 mm slip;

c) τ_1 = Bond stress at 1 mm slip; and

d) τ_{bu} = Bond stress at maximum force.

Other values may be agreed between the parties.

To obtain the four values of slip, record force-slip curves. These shall be made available on request.

A.8 Test report

The laboratory shall issue a report which shall contain the following information:

a) identification of the laboratory;

b) identification of the manufacturer of the product tested;

c) product number;

For Public Comment

© STANDARDS MALAYSIA 2013 - All right reserved

d) technical class of the reinforcing steel with reference to the product specification;

e) number of this standard (i.e. MS 144:YYYY) and type of test method;

f) nominal diameters tested and the series they represent;

g) surface geometry of the specimen, i.e. rib/indentation heights, rib/indentation spacing, rib/indentation inclinations and relative rib/indentation area;

h) strength class of the concrete, i.e. Type C (0.70) or Type C (0.45) according to EN 1766:2000;

i) compressive strength of the concrete at the date of testing;

j) dates of the tests;

k) all single test results;

l) description of the failure mode; and

m) force-slip curves.

For Public Comment

© STANDARDS MALAYSIA 2013 - All rights reserved

Annex B
(normative)

Identification requirements

B.1 Coils - Identification of the manufacturer

B.1.1 Ribbed or indented wires

B.1.1.1 Each reinforcing steel shall bear on one rib or indentation row, a mark identifying the works. This mark shall be repeated at an interval of not more than 1.5 m.

B.1.1.2 The mark shall consist of the following:

a) a symbol denoting the beginning of the mark; and

b) a numerical system identifying the manufacturer, consisting of the country of origin and the works number.

B.1.1.3 The numerical system identifying the manufacturer, consisting of a country number of origin and a works number shall use one of the following methods.

a) A number of normal ribs or indentations between widened ribs or indentations (for example, see Figure B.1).

b) A number of normal ribs or indentations between missing ribs or indentations.

c) Numbers on the surface of the wire.

d) Rolled or indented marks with a number of normal ribs or indentations in between them.

For Public Comment

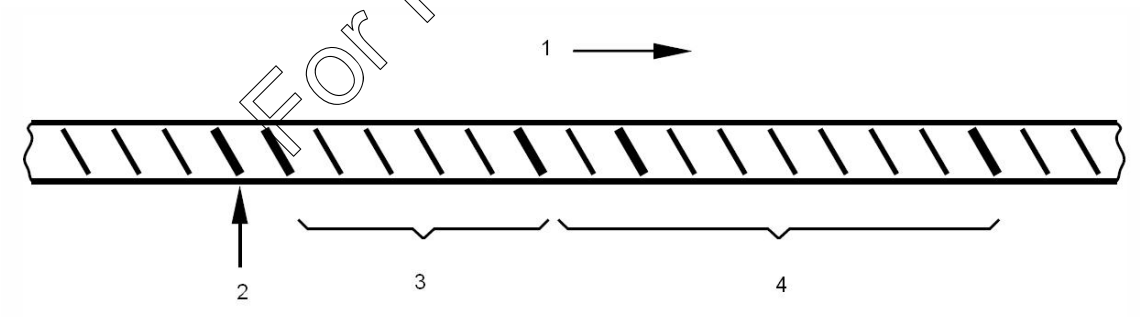

Key

1 direction of reading
2 start
3 country number (4)
4 works number (16)

Figure B.1. Example of manufacturer's identification mark (using widened ribs)

© STANDARDS MALAYSIA 2013 - All right reserved

B.1.1.4 The symbol indicating the start of the mark shall be one of the following:

a) where the marking method uses widened ribs or indentations, the symbol identifying the start of the mark shall consist of two consecutive widened ribs or indentations (for example see Figure B.1);

b) where the marking method uses missing ribs or indentations, the symbol identifying the start of the mark shall consist of two consecutive missing ribs or indentations;

c) where numbers are rolled onto the surface of the wire, the symbol indicating the start of the mark shall be an X or O; or

d) where marks are rolled or indented onto the surface, the start of the mark shall consist of a clearly identifiable starting symbol or two marks between one pair of normal ribs or indentations.

NOTE. If the numbers are read vertically along the product axis, the numbers should read from top to bottom.

B.1.1.5 The country of origin shall be indicated by a number between 1 and 9, according to Table B.1 (for example see Figure B.1).

B.1.1.6 The works number shall consist of a one or two digit number between 1 and 99, except for multiples of 10 (for example, see Figure B.1).

Table B.1. Identification of the country of origin

Country	Country number
Austria, Czech Republic, Germany, Poland, Slovakia	1
Belgium, Netherlands, Luxembourg, Switzerland	2
France, Hungary	3
Italy, Malta, Slovenia	4
UK, Ireland, Iceland	5
Denmark, Estonia, Finland, Latvia, Norway, Sweden	6
Portugal, Spain	7
Cyprus, Greece	8
Other countries	9

B.1.1.7 For coil, the manufacturer's identification refers to the works applying the final mechanical properties to the coil product.

B.1.1.8 In addition, an extra mark shall be applied at the beginning of the product mark to indicate that the product was produced as coil. The extra mark shall be one of the following:

a) where the marking system uses widened ribs or indentations, the extra mark shall be an additional widened rib or indentation at the start of the product mark;

b) where the marking system uses missing ribs or indentations, the extra mark shall be an additional missing rib or indentation at the start of the product mark;

For Public Comment

 © STANDARDS MALAYSIA 2013 - All rights reserved

c) where the marking system uses numbers, the extra mark shall be a C; and

d) where the marking system uses marks rolled onto the surface, the extra mark shall be two marks between a pair of normal ribs or indentations, placed immediately prior to the start of the product number.

B.1.2 Plain wires

B.1.2.1 Plain wires shall be identified with the same information as ribbed or indented wires.

B.1.2.2 The information shall either be applied by marks rolled or indented onto the product, or printed onto an attached label.

B.2 Decoiled product

B.2.1 In addition to the manufacturer's identification placed onto the coil product, an identification mark of the decoiler shall be either made on the product or printed on an attached label.

B.2.2 The product number shall be applied to the product prior to decoiling by the rolling mill or the processor.

For Public Comment

© STANDARDS MALAYSIA 2013 - All right reserved

Bibliography

[1] RILEM Publications SARL, *Recommendation RC5, Bond test for reinforcement steel - Beam test*, 2nd Ed. 1982 *(www.rilem.org)*

[2] BS 4482, *Steel wire for the reinforcement of concrete products - Specification*

For Public Comment

© STANDARDS MALAYSIA 2013 - All rights reserved

Acknowledgements

Members of Technical Committee on Steel Bars, Wire Rods and Wire Products

Ir Dr Abdul Majid Bin Abu Kassim (Chairman)	Association of Consulting Engineers Malaysia
Ms Lee Hooi Lan (Secretary)	SIRIM Berhad
Mr Azman Idris/Mr Mohamad Akhir Abdullah	IKRAM QA Services Sdn Bhd
Mr Chiam Kok Leang	Malaysian Iron and Steel Industry Federation
Ms Seri Banun Sujangi	MMC Gamuda KVMRT (PDP) Sdn Bhd
Mr Abdul Aziz Arshat/ Mr Khaizurran Mohd Saleh/ Mr Azam Mohamad	SIRIM QAS International Sdn Bhd
Ir Li Thang Fai	The Institution of Engineers, Malaysia
Dr Azmi Ibrahim	Universiti Teknologi MARA

Co-opted members:

Mr Yee Sen Tat	Amsteel Mills Sdn Bhd
Mr Ng See Men	Ann Joo Steel Bhd
Mr Danny Lee Chee Hui	Asia Wire Steel Mesh Manufacturers Sdn Bhd
Mr Nicolas Lim	CH Reinforcing Steel Sdn Bhd
Mr Jamaludin Mustafa	Perwaja Steel Sdn Bhd
Mr Wong Chun Kiat/Mr Mohamad Aizaq Main	Southern PC Steel Sdn Bhd
Ms Chua Seok Cheng	Southern Steel Berhad
Mr Yap Kong Lim	Southern Steel Mesh Sdn Bhd

For Public Comment

© STANDARDS MALAYSIA 2013 - All right reserved